Four Simple Practices to

BOOST BRIDGE ENGINEERING SKILLS

Raj Singh, MS, PE, PEng
Saqib Khan, MASc, SE, PEng

www.spannovation.ca/school

TABLE OF CONTENTS

Intro

SPANNOVATION BRIDGE & SEISMIC SCHOOL

The Spannovation Bridge & Seismic School has been set up with the intention of making a positive difference in the growth of young engineers through career coaching and practical application-based education. Simultaneously, we intend on making technological advancements in our specialized area of practice through focused research related to technical knowledge gaps we've come across in our practice. As its founders, we bring exceptional passion for bridges supported with over 40 years of combined experience covering a diverse background including: all bridge types, design and erection engineering, seismic engineering, traditional and alternative delivery projects, and entrepreneurial and business aspects of our profession. As in our professional practice, we strive for innovation in the design and delivery of educational course materials to maximize your learning potential.

Click the link below for an introduction to Spannovation by Saqib Khan.

Watch video >>

"Innovation is any change big or small that makes a difference."

~ Thomas Smith

Simple Practices with Far Reaching Results

We have created this document to expound the ideas described in our articles and videos related to the four simple practices that can catapult your bridge engineering career. While you receive on-the-job training working at design firms, in general there is a lack of career building mentoring. Rarely do we see firms implement a systematic program to holistically develop young engineers-in-training into mature engineers. We are generally relegated to learn through a trial and error approach.

Assuming you are actively engaged in structural analysis and getting exposure to design of bridges, we recommend four simple practices presented in this E-Book that will accelerate your technical development. The onus lies on you to understand, pursue and consistently implement these practices in your daily work to derive the maximum advantage. We invite you to take personal responsibility for your career growth and achieve greatness!

Click the link below on why you need to take charge of your career by Raj Singh (with or without a career coach).

Watch video >>

"The price of greatness is responsibility."

~ Winston Churchill

Practice One

SKETCH IT

Why Sketch It?

If you have been through engineering school and have worked at all in an engineering office, you would already realize that engineers cannot just talk to each other for very long while discussing technical issues. The conversation quickly turns into an exercise of sketching on a piece of paper or a board if one is available in the room. Some of the most skilled bridge engineers we've worked with rely heavily on hand sketches to convey ideas as they germinate in their mind. With advent of the technology age we find that the value of sketching is not emphasized enough at universities and engineering offices. Engineers of today tend to quickly jump on a computer even before concepts are clearly formed in their minds.

Even simple engineering ideas are not easy to articulate and communicate through a verbal medium. On the other hand, most abstruse concepts lend themselves to be rather easily conveyed through simple doodles. Sketches are a quick and easy way for creative expression, communication, brainstorming and refining ideas into concepts. They also enhance your ability to visualize the problem in three dimensions (3D).

Watch video >>

"How pretty a sketch looks is not important. Its all about communicating ideas to those around you."

~ Dyson Design Engineer

We don't need no Education!

We would encourage you to develop the practice of depicting problems and potential solutions through freehand sketching first, where appropriate. Your sketches do not need to be of exceptional quality (leave that for artists and architects); instead, with basic attention to relative proportioning you will be able to draw effectively for the purposes of discussion and to support your calculations. Where you require more precision such as detailing rebar in concrete sections, you can use CAD or similar software to prepare sketches that can be passed on to drafters as a starting point for drawings production.

TUTORIAL: Sydney Harbour Bridge

Click the link on the right to watch a tutorial on sketching the elevation of the landmark bridge in freehand, without the use of any instruments including a ruler.

Watch video >>

COURSE: Basic Sketching Skills for Bridge Engineers

This upcoming course will teach you basic hand-sketching principles to more effectively communicate creative ideas and concepts during the engineering process. Please visit www.spannovation.ca/school to join the mailing list for schedule updates and early bird offers.

"The frustration of not being able to effectively communicate far outweighs the frustration of not being able to sketch well."

~ Raj Singh

Practice Two

VISUALIZE IT

Why Visualize It?

Training yourself to form a picture in your mind's eye is a very important skill for a bridge engineer to gain a superior grasp of the problem; this is half the battle in developing context-sensitive solutions. One of the intangible benefits of the practice of sketching is that it will develop your ability to visualize as well. You can imagine how useful this skill would be on brown-field highway improvement projects with stacked interchange bridges and curved ramps that involve geometric and construction phasing complexities.

In addition to visualization of the physical situation, an aptitude to understand a structure and trace the flow of forces through it is extremely useful. This ability will allow you to conceive structural systems and their general behavior under various loading scenarios without resorting to computer analysis. You will then be able to develop concepts through hand calculations and simple sketches. . It is critical to realize that we should not let analysis results shape our design; instead, the Engineer should be in-charge and make the structure behave as he/she desires while satisfying the relevant constraints. Computer analysis then becomes a verification and refinement tool.

Watch video >>

"When you visualize, then you materialize."

~ Denis Waitley

We don't need no Education!

DRILL 1: Build Spatial Visualization Muscles

Engineers convey their designs through a combination of elevation /plan views and cross-sections. In other words, engineers communicate 3D situations through 2D drawings. However, an engineer must first be able to spatially conceive the geometry of the solution clearly in their mind prior to translating it into views and sections. The difficulty is that many engineers have underdeveloped spatial visualization skills early in their careers. Unless you specifically work on building this ability, it takes a long time to develop. This drill is designed to quicken your growth in this area.

Use a geometry drawing of a highway interchange, bridge general arrangement or a structural / mechanical component. Review the drawing closely to understand it and try to recreate the geometry in 3D in your mind. Finally, sketch the visual in a 3D view as per the example below.

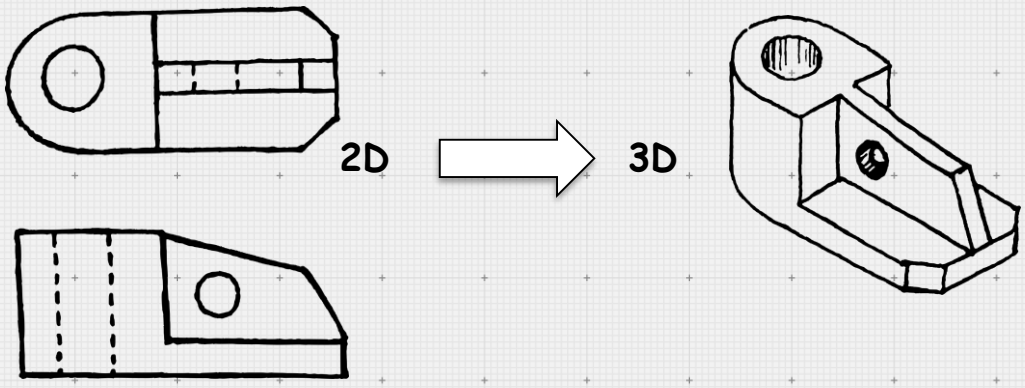

"The key to effective visualization is to create the most detailed, clear and vivid a picture to focus on."

~ George St-Pierre

We don’t need no Education!

DRILL 2: Build Structural Visualization Muscles

Lookout for interesting structures in your natural environment: bridges, buildings, stadiums, roofs (especially at airports, railway stations and religious buildings) and try to piece together the structural system. Attempt to trace the flow of vertical and lateral forces. Don’t lose heart if you struggle; make a simple sketch entailing a free-body diagram (FBD) for deeper understanding and for later discussion with your peers or supervisor. As an example, see a simple FBD of the BC Place Stadium roof showing how it balances vertical loads through a compression and tension ring.

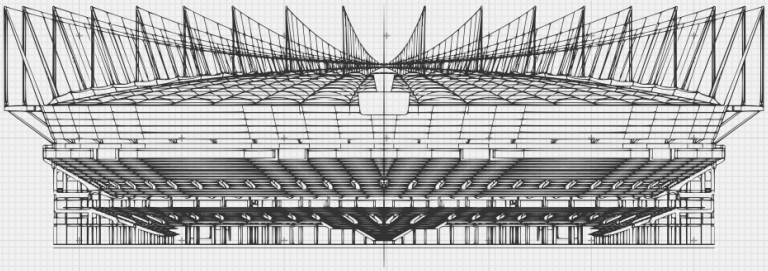

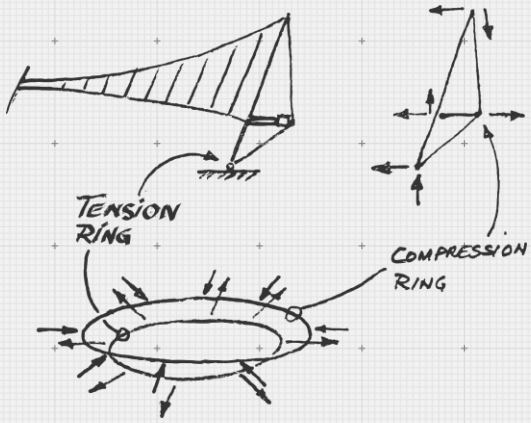

“You don’t understand structures unless you can feel their stress.”

~ Raj Singh

We don't need no Education!

EXERCISE: Demand Diagrams on a Two Column Bent

The global load demand diagrams due to gravity and seismic loads on a two-column bridge bent are produced schematically. The illustration below shows approximate shapes and locations of positive and negative flexure, and tension and compression in columns. Draw the Bending Moment Diagram (BMD) and Axial Force Diagram (AFD) for the combined gravity plus seismic loads. Assume that the transverse seismic shear is large enough to cause bending and axial load reversal in the beam and the column at the trailing column location.

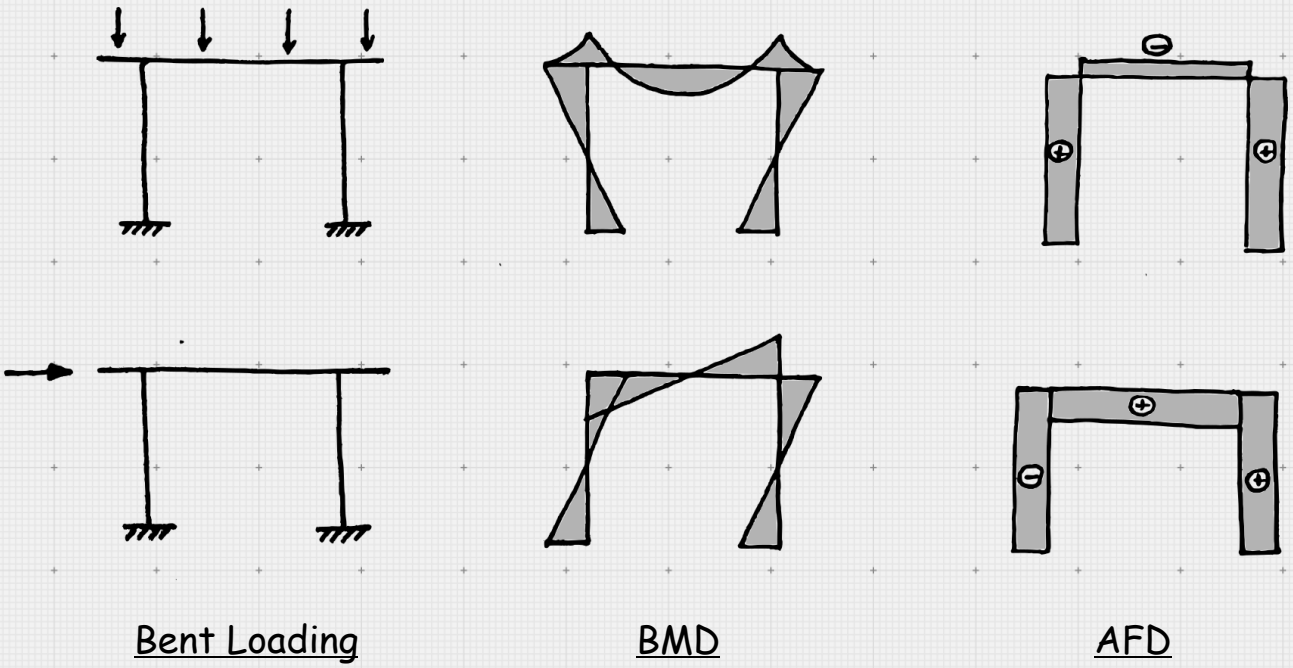

COURSE: Context-Sensitive Conceptual Design of Highway Bridges

This upcoming course will delve into deeper topics related to internal force effects in the major structural components including composite girders and how to succinctly visualize, calculate and conduct preliminary design. Please visit www.spannovation.ca/school to join the mailing list for schedule updates and early bird offers.

Practice Three

THINK BIG PICTURE

Big Picture

Global Context

It is easy for us to get lost in the weeds early in our careers as there is so much to learn technically about various bridge types and their associated elements and intricacies. Nonetheless, we would encourage you to develop the practice of stepping back and taking stock of the larger picture:

Visualize ascending to a bird's eye view to understand the "big picture" of how your bridge fits into the larger scheme of things (on the overall project) and how other disciplines interface with yours.

Your scope may not involve developing the configuration of the bridge but ask your supervisor on how the general arrangement came about. Learn about the influence of Highway Geometrics on the bridge layout and vice versa. Are there other roadway alignment options and why were they not best suited?

Ponder specific site challenges such as the need to maintain traffic flow along the highway corridor or continuity of critical utilities to the adjacent residential neighborhood. Would your bridge need to be built in stages to allow traffic flow during construction or can you use the old bridge as a detour?

Learn how site-specific issues such as environmental sensitivities, hydraulic opening, geometric alignment and clearances, private property and right of way, proximity of railway lines, etc. have impacted the permanent configuration and/or construction phasing of your bridge.

"We learn most readily, most naturally, most effectively, when we start with the big picture - precisely when the basics don't come first.."

~ Alfie Kohn

Big Picture

Global Context

We want to emphasize that liaison with other disciplines is a critical issue and is central to the idea of being able to see the big picture. If we had to pick one discipline that is most important to a bridge engineer, it would be **Geotechnical Engineering**, especially in seismic areas with high variability in sub-surface conditions. One can bury a lot of cost in the ground here. Therefore, it is important early in your career to start developing a feel for the various foundation types taking every opportunity possible to interact with geotechnical experts. Again, pick your supervisor's brain on the rationale behind the foundation type(s) for the bridges that you work on.

Watch video >>

"While the glamour is above, potential for major cost-savings is buried in the ground."

~ Anonymous Long Span Bridge Engineer

We don't need no Education!

EXAMPLE: Liquefaction Considerations

An example where liquefaction considerations are critical is shown in the illustration below. For the two cases shown, the required foundation type would be deep foundations, i.e. piles, due to the presence of liquefaction induced lateral flow and deep bearing strata. However, the geotechnical engineer's input would be critical as follows:

a) For the first case, would it be possible to carry out ground improvements and reduce the kinematic loads such that; pile sizes are optimized, or the soil movements are reduced such that shallow foundations, i.e. spread footings become feasible?

a) For the second case, it is unlikely that ground improvements could be carried out due to the deep zone of liquefaction. The geotechnical engineer would be the key to provide liquefied soil springs and kinematic movement profiles along the pile length. Full passive pressure from the non-liquefiable crust would need to be accounted for to ensure pile design adequacy.

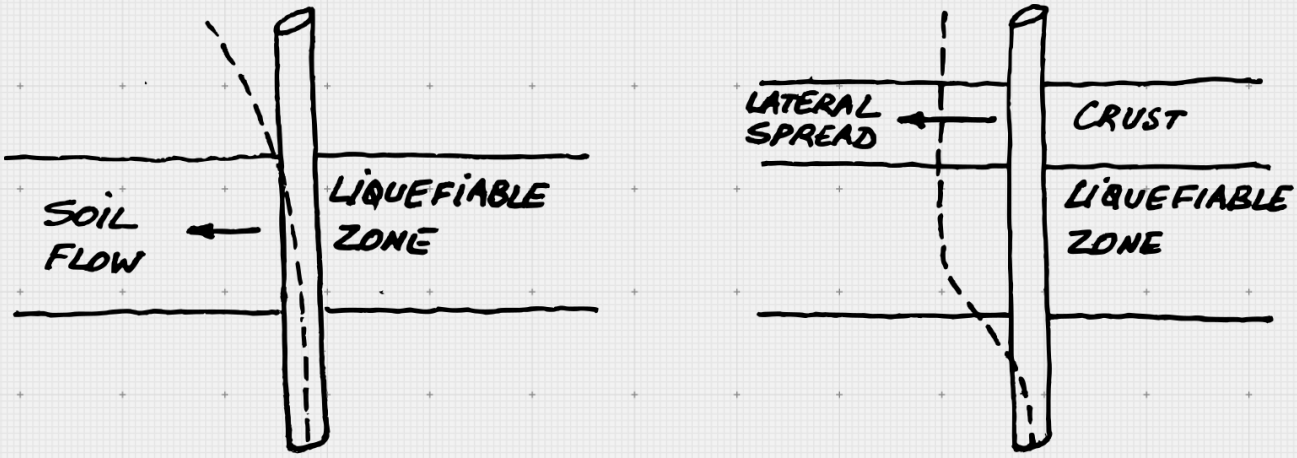

Figure adapted from ATC-49

We don't need no Education!

EXAMPLE: Overarching Design Philosophy

In addition to developing an understanding of the global context, getting a feel for and an understanding of the overarching design philosophy is a must-have skill to acquire. A very simple example in this context would be to understand if the bridge could be designed using the force-based approach or performance-based design in an area of high seismicity. Global load path and articulation options to activate this load path require a basic understanding of the site conditions, geotechnical challenges, the earthquake resisting system, performance requirements, etc.

A simple illustration shown below, and the following discussion shed some light on how to understand the global seismic load path and the related articulation choices.

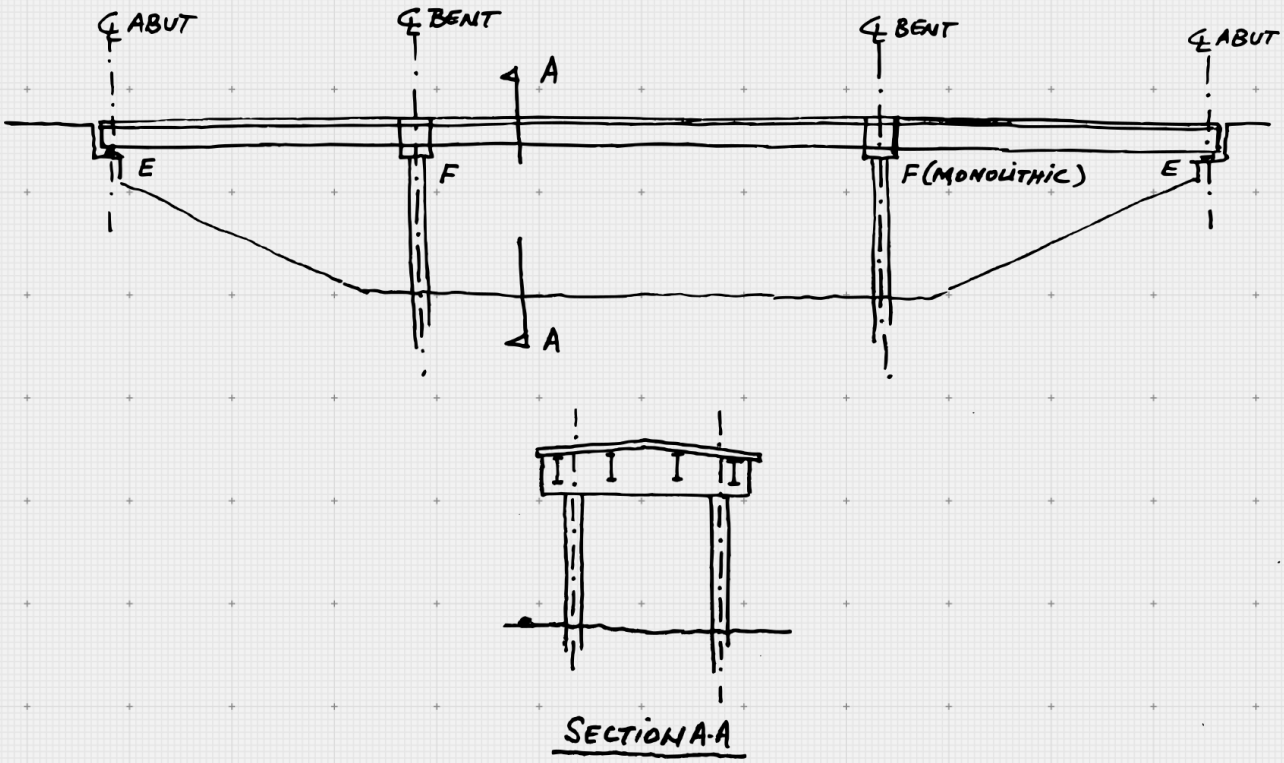

We don't need no Education!

EXAMPLE: Overarching Design Philosophy

For the above example, the longitudinal seismic load originating at the deck level can be primarily resisted by the pier columns if we make the gap between the end diaphragm and the abutment backwall sufficiently large. For the shown framing scheme, the columns will be in double curvature for longitudinal seismic resistance. Transversely, both the bents and the abutments will contribute to varying degrees based on their relative stiffness. The columns will again act in double curvature. If the bridge aspect ratio is small, the deck will act as a rigid diaphragm. If the abutments have high stiffness relative to the columns (which is usually the case) along with enough strength, most of the transverse seismic load will be resisted by the abutments. If the abutments deform, more load will be shed back to the bents.

EXERCISE: Determine Alternative Bridge Articulation

Determine an alternative bridge articulation at piers and abutments, and the resulting effect on girder and other component design and detailing if:

a) The columns have enough capacity to resist seismic loads in single curvature

a) The abutments are on light weight fill and can resist little seismic load in each direction

Practice Four

THINK CONSTRUCTION

Why Think Construction?

Since most bridge firms are not engaged in the practice of erection engineering, most engineers are usually concerned with the bridge in its final state only.

While working on cable stayed bridges early in his career, Raj realized that the erection sequence has a major influence on the final stress state and bridge geometry. On typical highway girder bridges this is usually not the case, and this is precisely why most EITs don't need to give much thought to erection stages. However, in some instances, even for girder bridges, you will need to assess and verify that your bridge can survive the temporary erection stages such as in the case of incremental launching.

Watch video >>

As an example, the illustration below shows an erection concept for the center segment of a steel box girder using a tandem crane lift; the left truck crane is positioned on a pre-existing bridge underneath while the right crawler is sitting on mats along railway tracks (requiring an estimated 4 hour closure to complete the operation). Note that this cantilever erection methodology locks in larger dead load moments over the piers compared to the erection of a long center span segment (conventional splice locations). Therefore, the demands resulting from the cantilever erection methodology should be considered in the design.

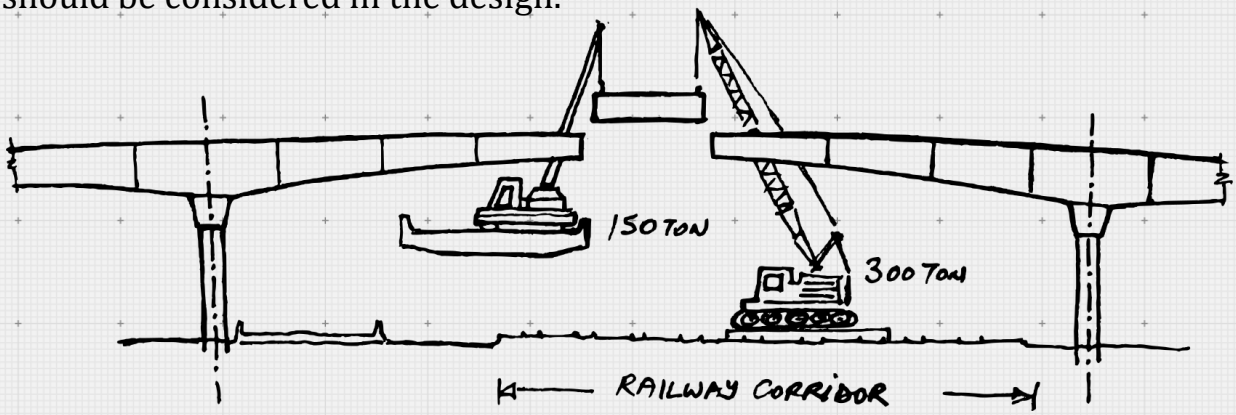

Why Think Construction?

The Sydney Harbour Bridge serves as an excellent example where the construction methodology influenced the permanent design and configuration of the bridge. In fact, the unique shape of the arch of this landmark bridge is largely determined by the erection scheme instead of aesthetics. The structural reason for providing a large lever arm between the top and bottom chords of the arch truss is no longer valid in the permanent state of the bridge.

Watch video >>

"The road to success is always under construction."

~ Lily Tomlin

We don’t need no Education!

DRILL: Constructability of Major Components

As a practice, on every bridge you work on, try to conceive the possible ways it could be constructed from the foundations up to the superstructure. Make a habit of reviewing your thoughts with your supervisor.

Think about how the prefabricated components (structural steel or precast girder segments) of your bridge will be transported, staged and erected. This will make you delve into girder shipping lengths and weights while carrying out conceptual and detailed design. Such logistical and transportation considerations directly impact design decisions such as lengths of segments and corresponding cross-sectional dimensions, splice locations, assembly procedures, etc.

Erection methodologies such as launching requires careful planning and thoughtful detailing practices. For example, it is preferable to have a flat bottom flange with a constant width for launching steel girders. Although not impossible, such details prevent the need for adjusting launching equipment due to flange width transitions and thickness variations. In order to ensure a flat bottom flange, the thickness changes are accommodated in the web.

Regular self-inquiry into the above aspects will start casting a filter of practicality on your work, making it that much more valuable to your clients.

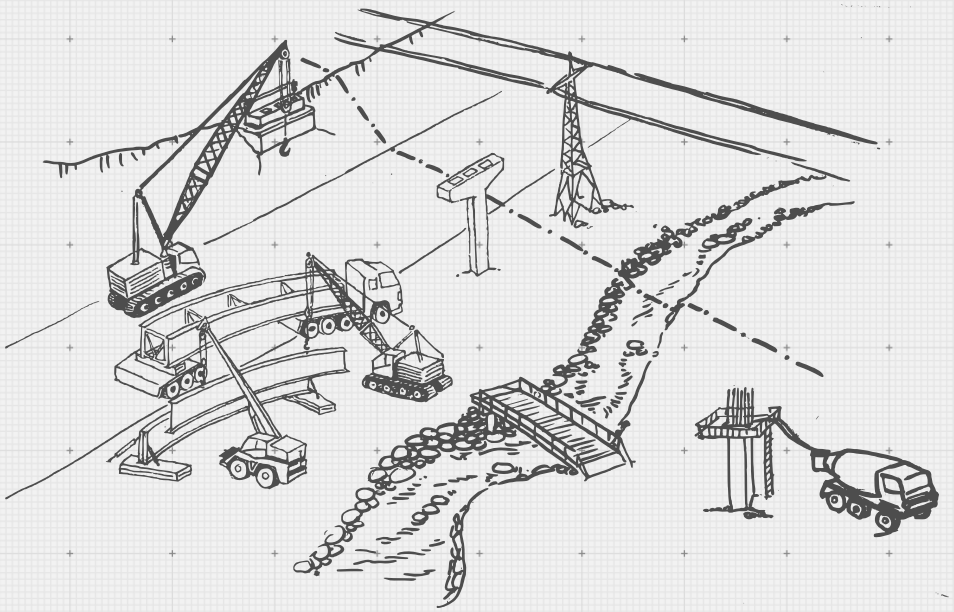

We don't need no Education!

EXERCISE: Incremental launching

The figure below shows a scenario with a highly unbalanced span configuration due to site constraints. The railyard underneath is extremely busy year-round and nightly, or weekend closures are not possible. Therefore, the girders must be launched and launching from west to east has been determined to be more favorable.

The cross-section of the bridge comprises 6 girders, which would be launched in three pairs. For this preliminary assessment, the weight of one girder and the contributory construction live load can be assumed to be uniformly distributed as w (per unit length). The weight of the launch nose can be assumed as P acting at the shown location. For the shown scenario where the launch nose is just about to touch down at the east abutment, what is the most likely buckling location for the girder pair and what is the unfactored bending moment in each girder?

(Hint: Do not overthink this problem! The problem can be solved by figuring out the location of maximum bending moment and application of simple statics).

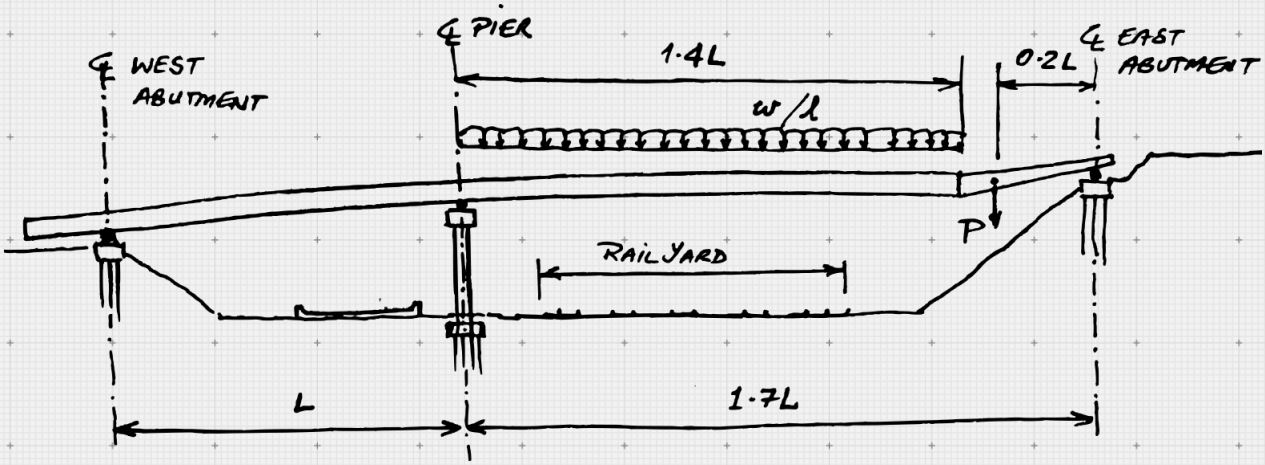

CONCLUSION

Bridge and Seismic Engineering is a highly specialized area of Civil Engineering, which is often considered the mother of all engineering. As we graduate from Engineering School and step into the world of bridge engineering, the onus is on us to learn the basics and intricacies of this exciting field and excel in our careers. The four simple practices of sketching, visualizing, comprehending the big picture, and understanding construction methods and constraints are fundamental pillars of accelerating your learning and creating a deeper grasp of the fundamental and in-depth behaviour of bridges.

Finally, we would like to point out that most young engineers find the start of their careers a bit daunting. Often, a critical and harsh judgement is passed on young engineers' abilities as they are still developing their skills and gathering knowledge that was never imparted or taught in a rather poor fashion. Do not let others' judgement about the "lights not being on" tarnish your self-image. Strive with patience as you incorporate these practices consistently and always be hungry for more knowledge. While one never achieves mastery, the journey is joyful and full of rewards and contentment.

"With consistent practice, the 'light bulbs will come on' and the 'aha' moments will happen more frequently. You are on a journey of life-long learning; the day you think you've mastered it, hang your coat and head for the Himalayas".

~ Saqib Khan

STAY TUNED

Click the link below to join our mailing list to get updates on courses and early bird offers

JOIN FOR FREE